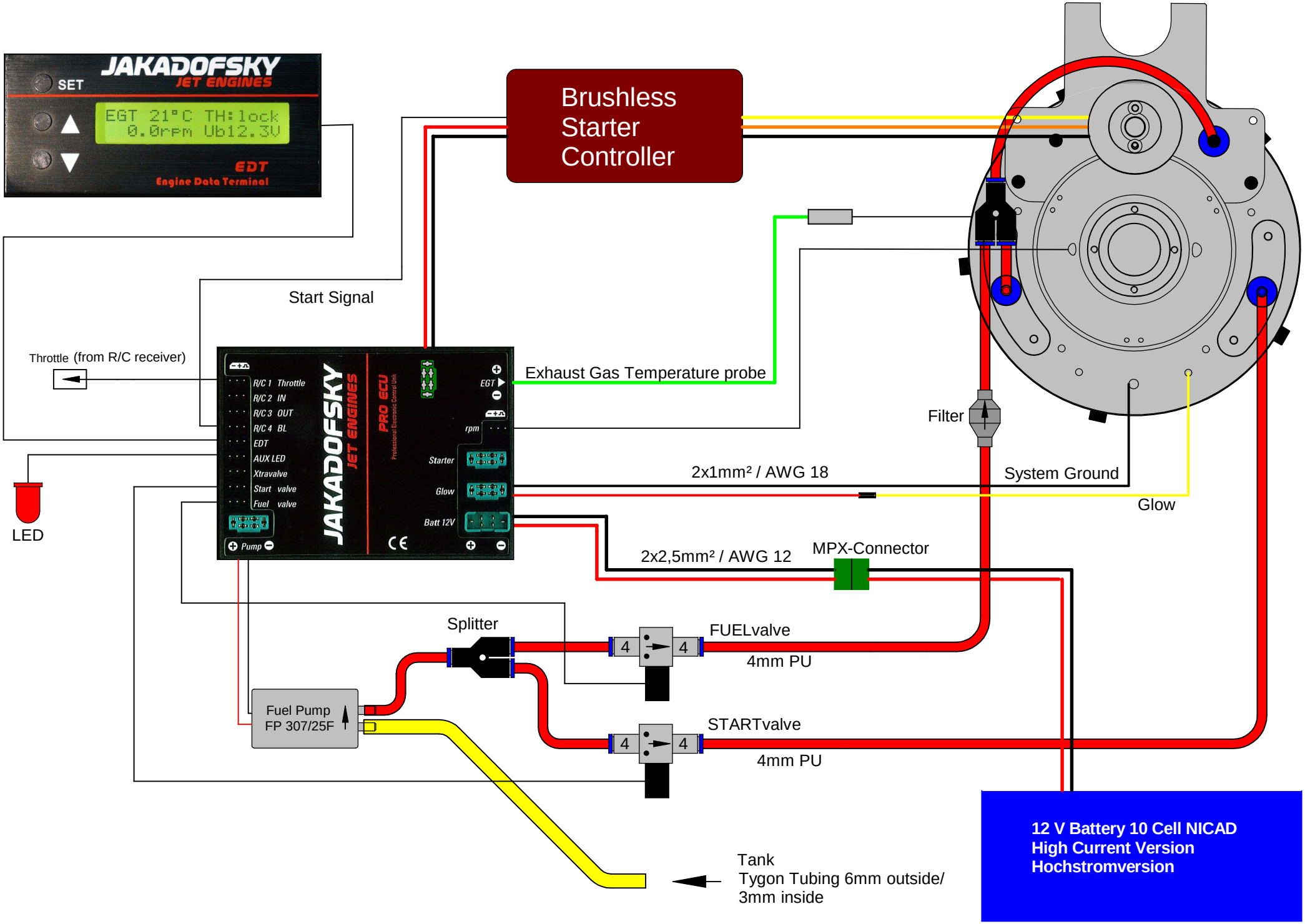
JAKADOFSKY
JET ENGINES
SET
EGT 21°C TH:lock
0.0rpm Ub12.3V
EDT
Engine Data Terminal
Brushless
Starter
Controller
Start Signal
Throttle (from R/C receiver)
R/C 1 Throttle
R/C 2 IN
R/C 3 OUT
R/C 4 BL
EDT
AUX LED
Xtravalve
Start valve
Fuel valve
Pump
JAKADOFSKY
JET ENGINES
PRO ECU
EGT
rpm
Starter
Glow
Batt 12V
Exhaust Gas Temperature probe
Filter
System Ground
2x1mm² / AWG 18
Glow
LED
2x2,5mm² / AWG 12
MPX-Connector
Splitter
FUELvalve
4mm PU
Fuel Pump
FP 307/25F
STARTvalve
4mm PU
Tank
Tygon Tubing 6mm outside/
3mm inside
12 V Battery 10 Cell NICAD
High Current Version
Hochstromversion